Vertical Multistage Centrifugal Pumps

DAF SERIES

TECHNICAL MANUAL

Mas Grup

Revision No: 00

May/2019

DAF Series

Vertical Multistage Centrifugal Pumps

General Specifications

Mas Grup

Fields of Applications

For pumping of thin, clean, non-aggressive and non-explosive liquids free from solid particles and fibres in:

- Water supply systems,
- Booster sets in high rise buildings and industry,
- Water treatment systems,
- Industrial facilities for process water,
- Sanitary and cleaning installations,
- Irrigation plants,
- Fire extinguishing plants,

Design

- DAF series pumps is a vertical axis, ring section design multistage centrifugal pump of non-self priming type. They have an impeller made of noryl material and they are driven with a standard electric motor.
- Pump and motor are connected to each other via rigid coupling.
- The pressure-resistant casing and the components which fluid is flowing through are anchored by using casing studs between top side and bottom side of the pump.
- While suction nozzle is located bottom side of the pump, discharge nozzle is located top side of the pump.
- When viewed from driver side, rotation of direction is clockwise.

Shaft

In DAF series pumps, the shafts used in DAF 3000, DAF 6000, DAF 9000 types are hexagonal and they are made of AISI 430F material. In DAF 3300, DAF 5000, DAF 5000A, DAF 5000B ve DAF 6500 types are used milled shafts made of AISI 420 material.

Bearings

There is no ball bearing on the pump. However, motor bearings carry the axial load occuring in the pump. There is a sliding bearing at the bottom side of the pump and it is made of NBR material.

Shaft Seal

In DAF series pumps, mechanical seals are used for sealing.

Tecnical Data

- Capacity Range : 2 – 60 m³/h
- Head Range : 20 – 150 mwc
- Operating Pressure : 16 Bar (Max.)
- Temperature Range : 0 – 60 °C
- Speed : 2900 rpm

Identification Code for Pump

Example: **DAF 3012**

Pump Type

No of Stages

Mechanical Seal

Pump	Mechanical Seal Dia.
DAF 3000	Ø 12
DAF 6000	Ø 12
DAF 9000	Ø 16
DAF 3300	Ø 16
DAF 5000	Ø 25
DAF 5000A	Ø 25
DAF 5000B	Ø 25
DAF 6500	Ø 25

DAF 3000 / DAF 6000 / DAF 9000

Pump Materials

PATENT PENDING
NO: 2019/06955

Parts \ Material No	0.6025 GG 25	1.4105 AISI 430F	1.4016 AISI 430	1.4301 AISI 304	NORYL
Discharge Casing	●				
Suction Casing	●				
Stage Casing			●		
Impeller					●
Shaft		●			
Pump Shield				●	

Material Equivalent

Description	DIN 17007	EN - DIN	ASTM
Cast Iron	0.6025	GJL-250 (GG25)	A 48 Class 40-B
Chrome Stainless Steel	1.4021	X20 Cr 13	A 276 Type 420
Chrome Nickel Stainless Steel	1.4301	X5 Cr Ni 18 9	A 276 Type 304
Stainless Steel	1.4105	X12CrMoS17	AISI 430F
Stainless Steel	1.4016	X14CrMoS17	AISI 430

For DAF 3000 / DAF 6000 / DAF 9000 models;

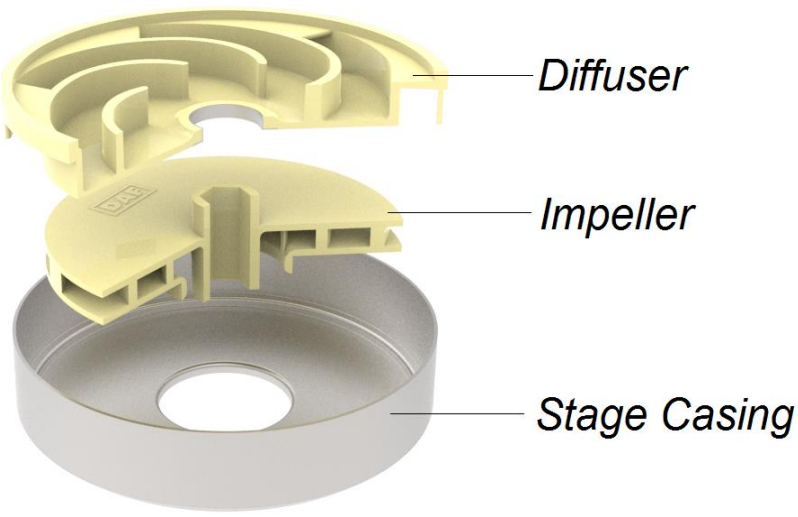

Due to the AISI 430 material design of stage casing;

- ✓ ***High durability against waterless conditions!***
- ✓ ***Silent and comfortable working conditions!***
- ✓ ***High mechanical resistance!***

DAF 3300 / DAF 5000 / DAF 5000A / DAF 5000B / DAF 6500

Pump Material

Parts \ Material No	0.6025 GG 25	1.4021 AISI 420	1.4301 AISI 304	NORYL
Discharge Casing	●			
Suction Casing	●			
Stage Casing				●
Impeller				●
Shaft		●		
Pump Shield			●	

Material Equivalent

Description	DIN 17007	EN - DIN	ASTM
Cast Iron	0.6025	GJL-250 (GG25)	A 48 Class 40-B
Chrome Stainless Steel	1.4021	X20 Cr 13	A 276 Type 420
Chrome Nickel Stainless Steel	1.4301	X5 Cr Ni 18 9	A 276 Type 304
Stainless Steel	1.4105	X12CrMoS17	AISI 430F
Stainless Steel	1.4016	X14CrMoS17	AISI 430

For DAF 3300 / DAF 5000 / DAF 5000A / DAF 5000B / DAF 6500 models;

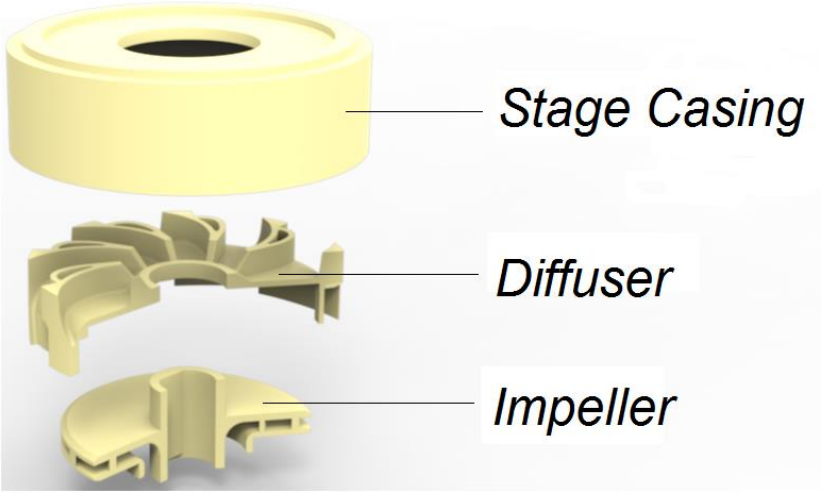

DAF Series

Vertical Multistage Centrifugal Pumps

Exploded View and Part List

Mas Grup

PATENT PENDING
NO: 2019/06955

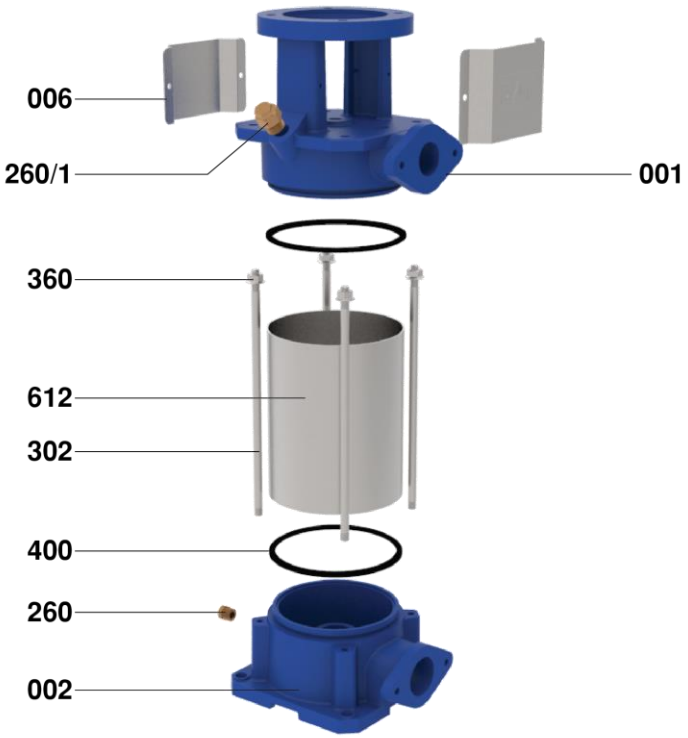

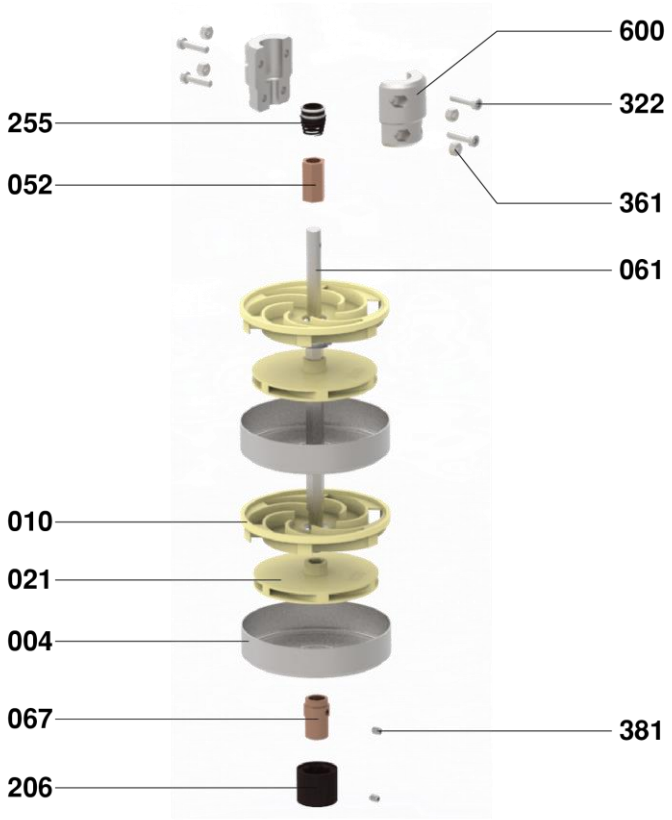

PART NO	PART NAME	PART NO	PART NAME
001	Discharge Casing	260	Blind Plug
002	Suction Casing	260/1	Air Relief Cock
004	Stage Casing	302	Stud
006	Coupling Cover Plate	322	Coupling Bolt
010	Diffuser	360	Stud Nut
021	Impeller	361	Coupling Nut
052	Mechanical Seal Sleeve	381	Set-Screw
061	Shaft (Hex.)	400	Shield Gasket
067	Bottom Nut	600	Coupling
206	Bottom Rubber	612	Stainless Shield
255	Mechanical Seal		

DAF 3300 / DAF 5000 / DAF 5000A / DAF 5000B / DAF 6500

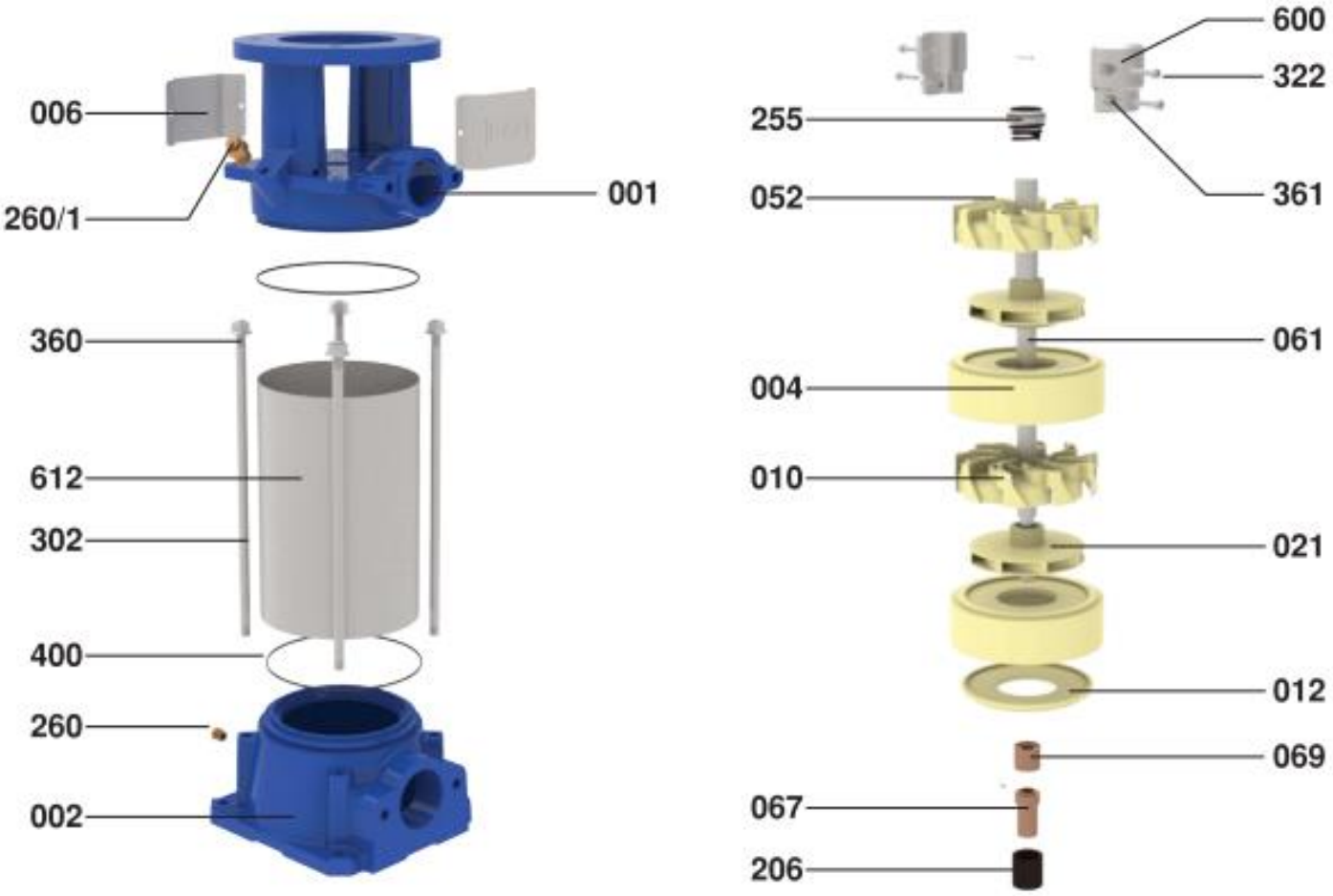

PART NO	PART NAME	PART NO	PART NAME
001	Discharge Casing	206	Bottom Rubber
002	Suction Casing	255	Mechanical Seal
004	Stage Casing	260	Blind Plug
006	Coupling Cover Plate	260/1	Air Relief Cock
010	Diffuser	302	Stud
012	Kademe Kapağı	322	Coupling Bolt
021	Impeller	360	Stud Nut
052	Mechanical Seal Sleeve	361	Coupling Nut
061	Shaft (Hex.)	400	Shield Gasket
067	Bottom Nut	600	Coupling
069	Impeller Adjusting Bushing	612	Stainless Shield

Sectional Drawing and Part List for DAF 3000 – DAF 6000 – DAF 9000

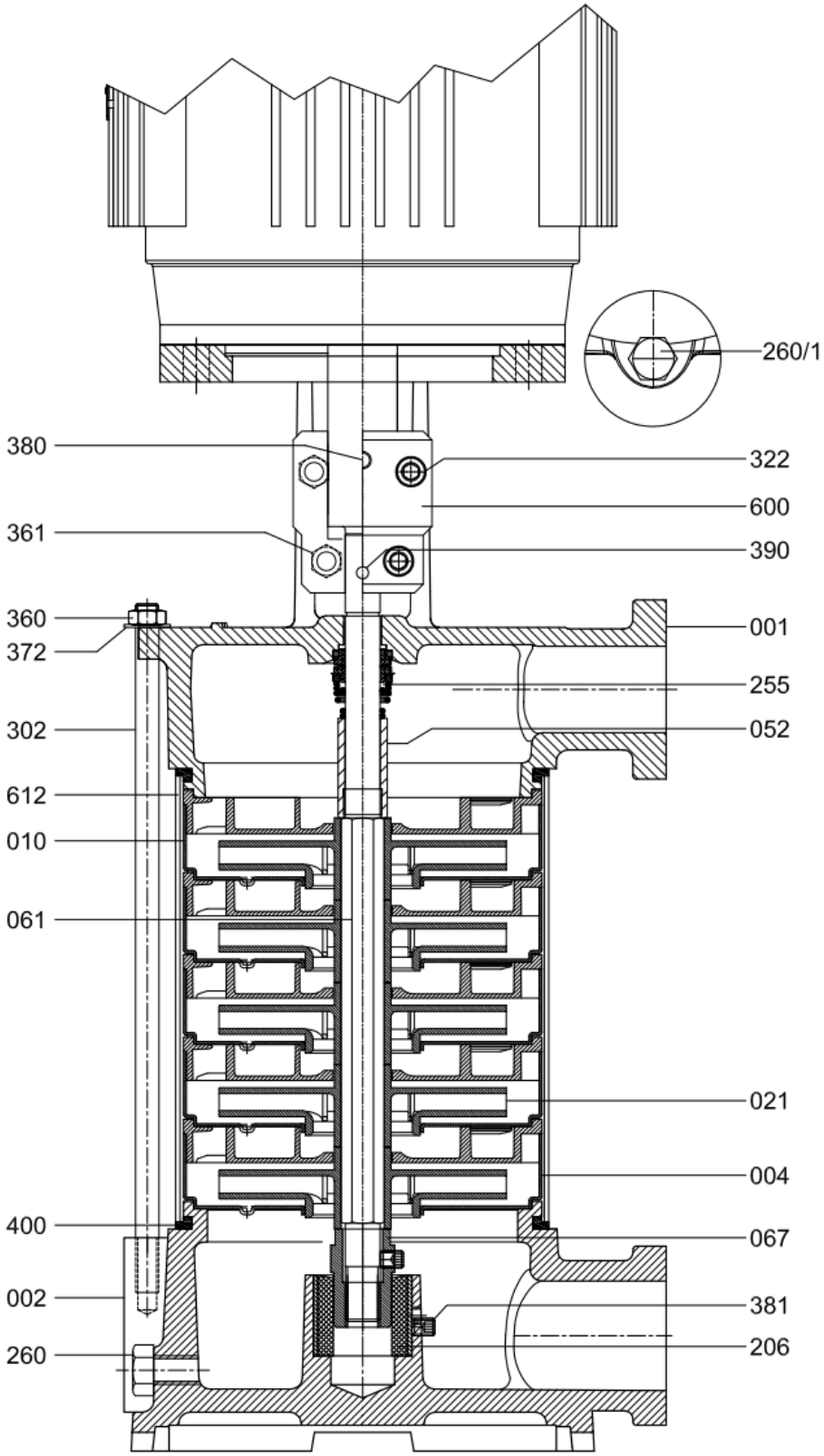

PATENT PENDING
NO: 2019/06955

PART NO	PART NAME
001	Discharge Casing
002	Suction Casing
004	Stage Casing
010	Diffuser
021	Impeller
052	Mechanical Seal Sleeve
061	Shaft (Hex.)
067	Bottom Nut
206	Bottom Rubber
255	Mechanical Seal
260	Blind Plug
260/1	Air Relief Cock
302	Stud
320	Motor Connection Bolt
322	Coupling Bolt
360	Stud Nut
361	Coupling Nut
372	Stud Washer
380	Set-Screw
381	Set-Screw
390	Coupling Pin
400	Shield Gasket
600	Coupling
612	Stainless Shield

Sectional Drawing and Part List for DAF 3300 – DAF 5000 – DAF 5000A – DAF 5000B – DAF 6500

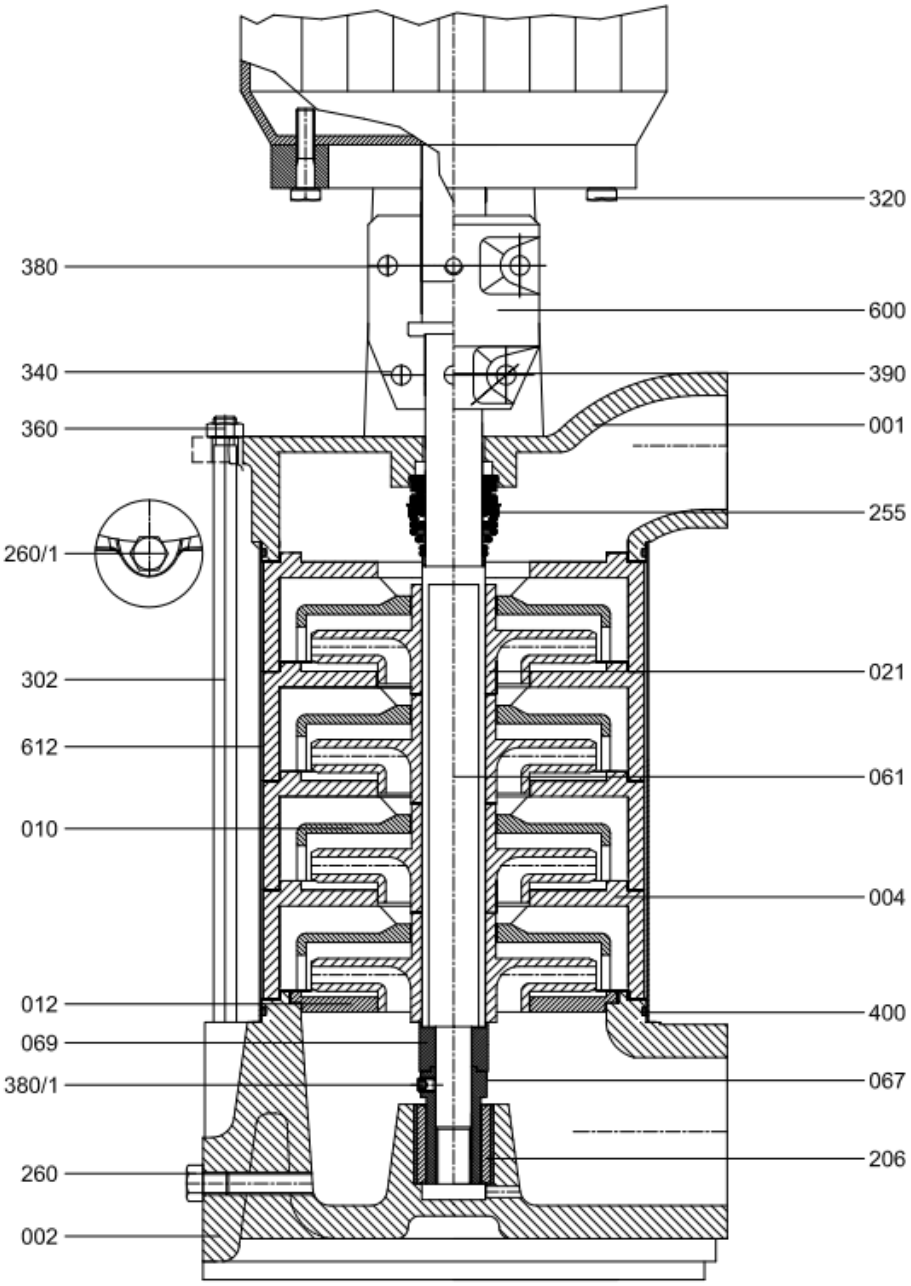

PART NO	PART NAME
001	Discharge Casing
002	Suction Casing
004	Stage Casing
010	Diffuser
012	Diffuser Cover
021	Impeller
061	Shaft
067	Bottom Nut
206	Shaft Centring Bush
255	Mechanical Seal
260	Water Relief Plug
260/1	Water Filling Plug
302	Stud
320	Motor Connection Bolt
340	Coupling Bolt
360	Stud Nut
380	Set-Screw
380-1	Set-Screw (Bottom Nut)
390	Roller Pin
400	O-Ring
600	Coupling
612	Pump Shield

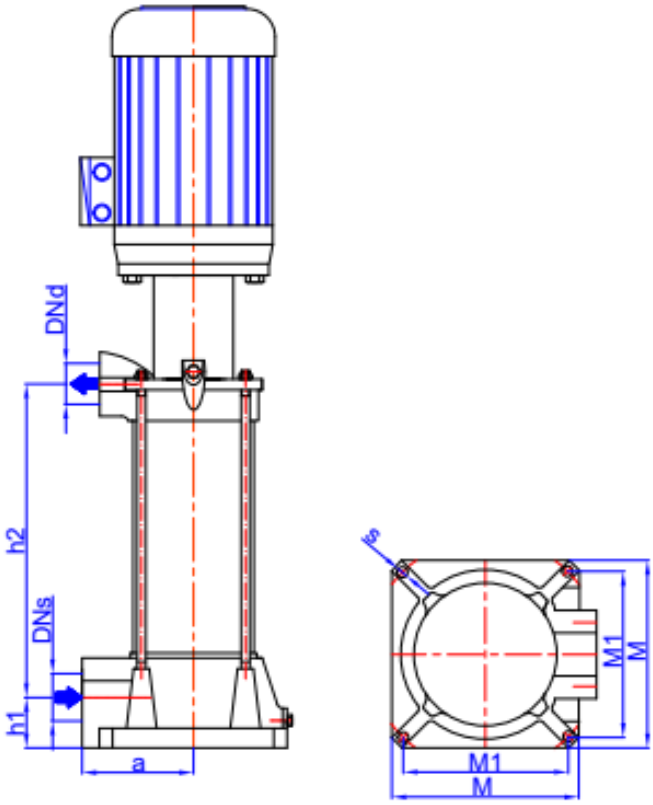

Pump Type		M. Power (kW)	DNs	DNd	h1	h2	a	Øs	M1	M
DAF 3000	DAF 3006	0.75	38	30	37	205	100	10	117	147
	DAF 3007	0.75				227				
	DAF 3008	1.1				249				
	DAF 3009	1.1				271				
	DAF 3010	1.1				293				
	DAF 3011	1.5				315				
	DAF 3012	1.5				337				
DAF 3300	DAF 3306	1.1	32	40	41	286	92	11	135	164
	DAF 3308	1.5				352				
	DAF 3310	2.2				418				
	DAF 3312	3				484				
DAF 6000	DAF 6005	2.2	38	30	40	220	105	12	132	160
	DAF 6006	2.2				248				
	DAF 6007	2.2				276				
	DAF 6008	3				304				
	DAF 6009	3				332				
	DAF 6010	3				360				

Pump Type		M. Power (kW)	DNs	DNd	h1	h2	a	Øs	M1	M
DAF 9000	DAF 9004	3	48	38	48	216	130	12	160	200
	DAF 9005	4				249				
	DAF 9006	5.5				282				
	DAF 9007	5.5				315				
	DAF 9008	7.5				348				
DAF 5000	DAF 5004	3	50	65	65	301	120	13	181	220
	DAF 5005	4				349				
	DAF 5006	5.5				397				
	DAF 5007	7.5				445				
	DAF 5008	11				493				
	DAF 5009	11				541				
	DAF 5010	11				589				
DAF 5000A	DAF 5003A	4	50	65	65	253	120	13	181	220
	DAF 5004A	5.5				301				
	DAF 5005A	7.5				349				
	DAF 5006A	7.5				397				
	DAF 5007A	11				445				
	DAF 5008A	11				493				
DAF 5000B	DAF 5003B	5.5	50	65	65	253	120	13	181	220
	DAF 5004B	7.5				301				
	DAF 5005B	11				349				
	DAF 5006B	11				397				
	DAF 5007B	15				445				
	DAF 5008B	15				493				
DAF 6500	DAF 6503	11	65	80	70	360	130	13	201	240
	DAF 6504	15				434				
	DAF 6505	15				508				
	DAF 6506	18.5				582				

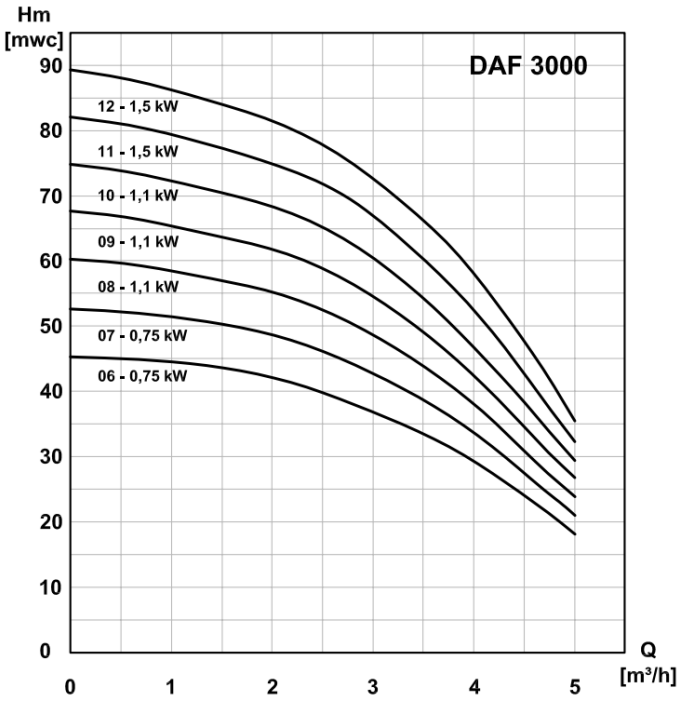
DAF 3000
Hm [mwc]
Q [m³/h]
12 - 1,5 kW
11 - 1,5 kW
10 - 1,1 kW
09 - 1,1 kW
08 - 1,1 kW
07 - 0,75 kW
06 - 0,75 kW

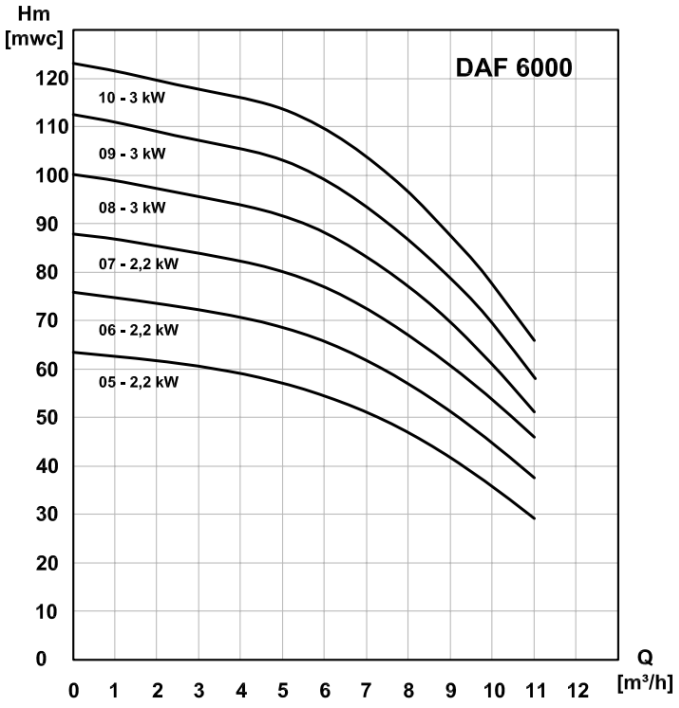
DAF 6000
Hm [mwc]
Q [m³/h]
10 - 3 kW
09 - 3 kW
08 - 3 kW
07 - 2,2 kW
06 - 2,2 kW
05 - 2,2 kW

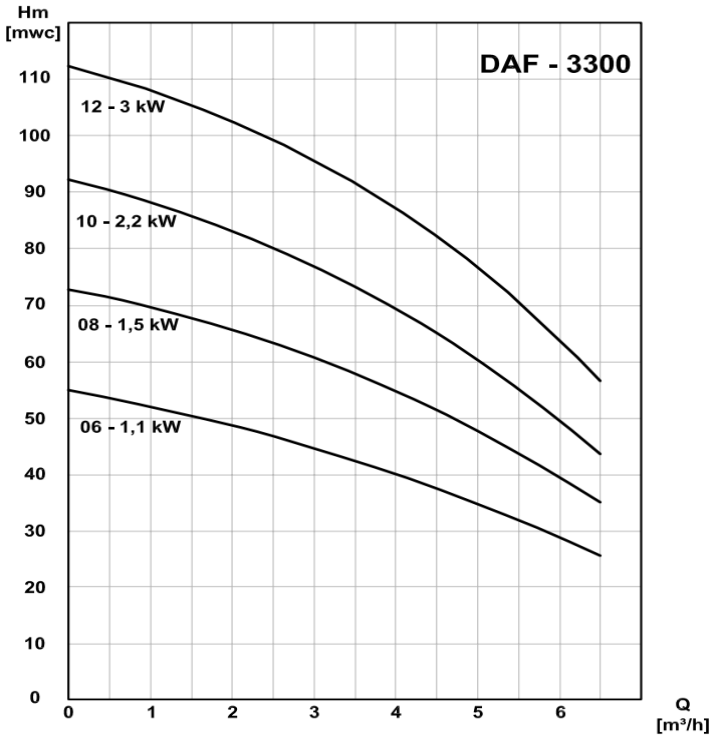
DAF - 3300
Hm [mwc]
Q [m³/h]
12 - 3 kW
10 - 2,2 kW
08 - 1,5 kW
06 - 1,1 kW

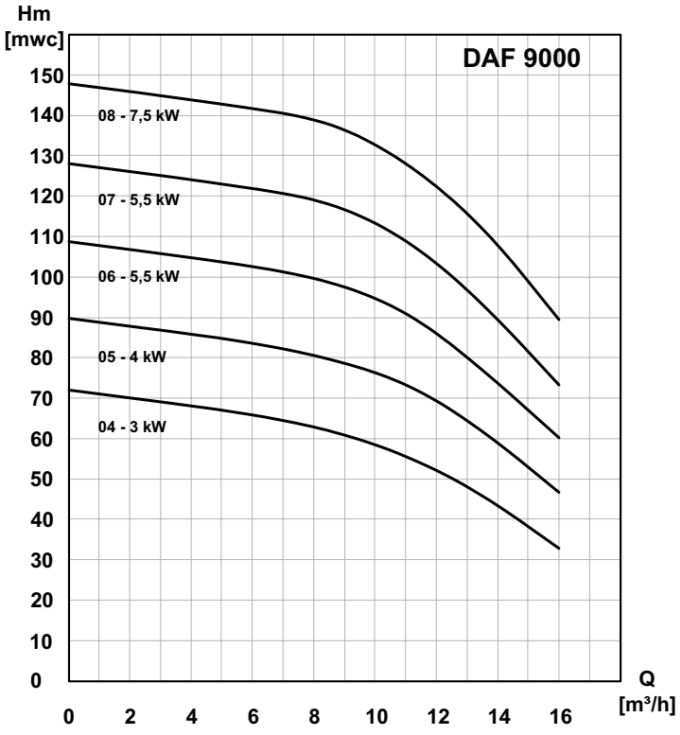
DAF 9000
Hm [mwc]
Q [m³/h]
08 - 7,5 kW
07 - 5,5 kW
06 - 5,5 kW
05 - 4 kW
04 - 3 kW

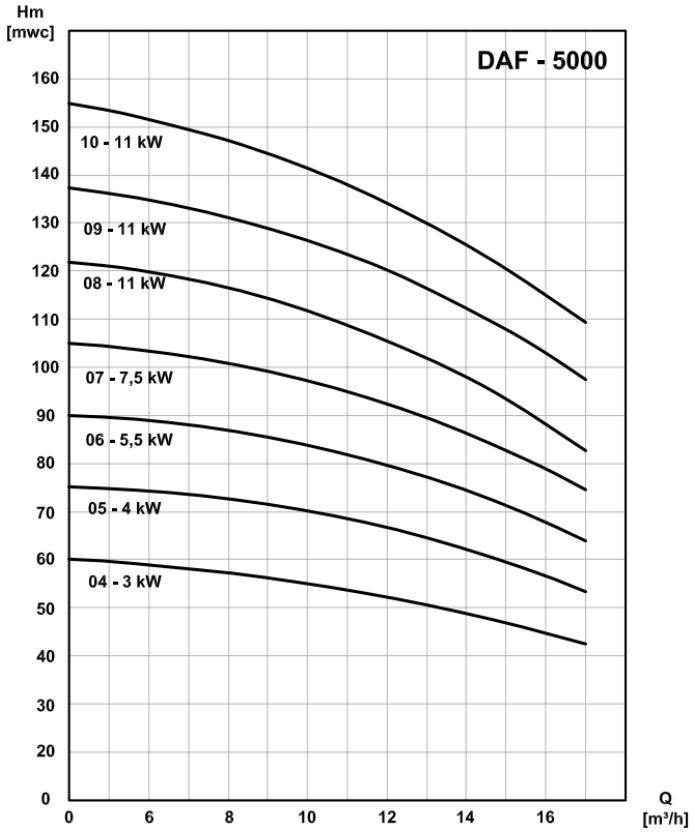
DAF - 5000
Hm [mwc]
Q [m³/h]
10 - 11 kW
09 - 11 kW
08 - 11 kW
07 - 7,5 kW
06 - 5,5 kW
05 - 4 kW
04 - 3 kW

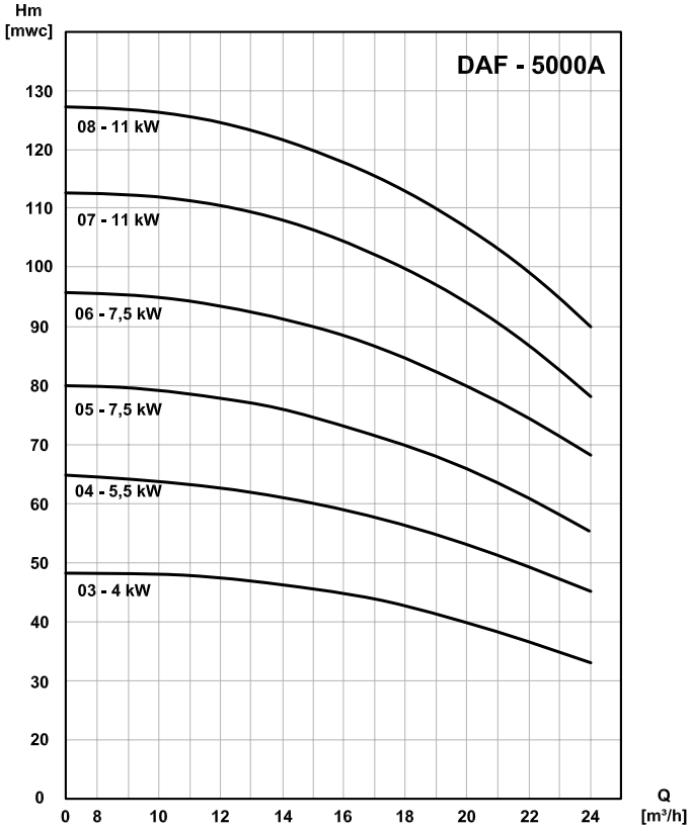
DAF - 5000A
Hm [mwc]
Q [m³/h]
08 - 11 kW
07 - 11 kW
06 - 7,5 kW
05 - 7,5 kW
04 - 5,5 kW
03 - 4 kW

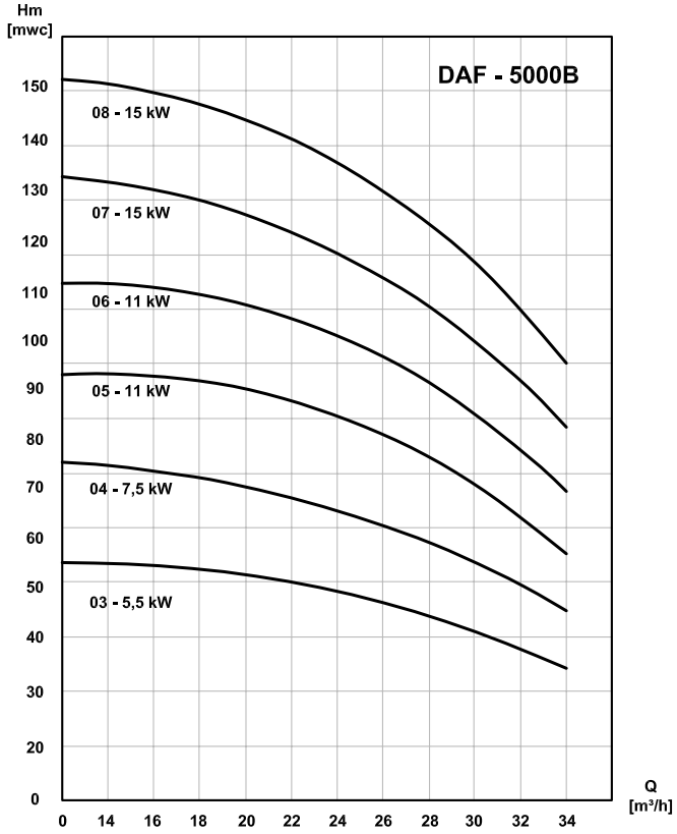
DAF - 5000B
Hm [mwc]
Q [m³/h]
08 - 15 kW
07 - 15 kW
06 - 11 kW
05 - 11 kW
04 - 7,5 kW
03 - 5,5 kW

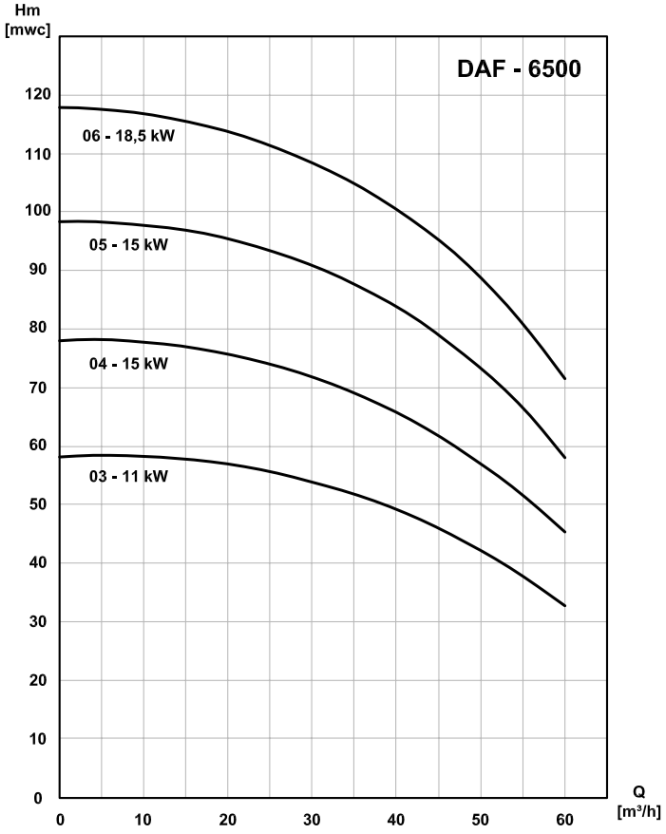
DAF - 6500
Hm [mwc]
Q [m³/h]
06 - 18,5 kW
05 - 15 kW
04 - 15 kW
03 - 11 kW

Mas Grup

Head Office / Center Service:
Aydınlı Mah. Birlik OSB. 1.No'lu Cadde No:17 Tuzla - İSTANBUL / TÜRKİYE
Tel: +90 (216) 456 47 00 pbx Fax: +90 (216) 455 14 24

Ankara Regional Directorate:
Aşağı Öveçler Mah. 1329 Sok. No:6/9 Öveçler ANKARA / TURKEY
Tel: +90 (312) 472 81 60-67 Fax: +90 (312) 472 82 51

Factory:
1. Organize Sanayi Bölgesi Parsel 249/5 Beyköy - DÜZCE / TÜRKİYE
Tel: +90 (380) 553 73 88 Fax: +90 (380) 553 71 29

www.masgrup.com info@masgrup.com